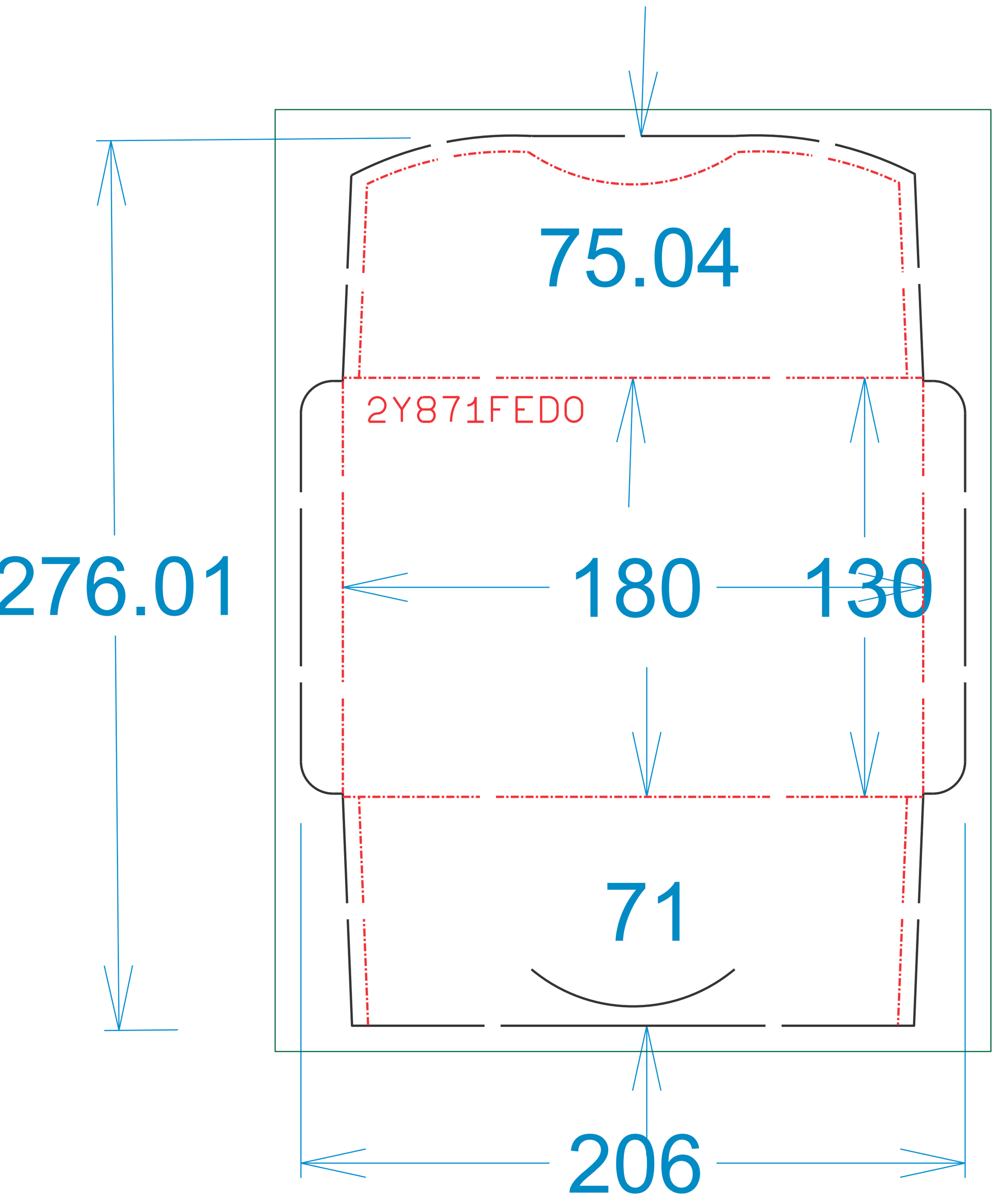
75.04
2Y871FED0
276.01
180
130
71
206